ICEZONE®

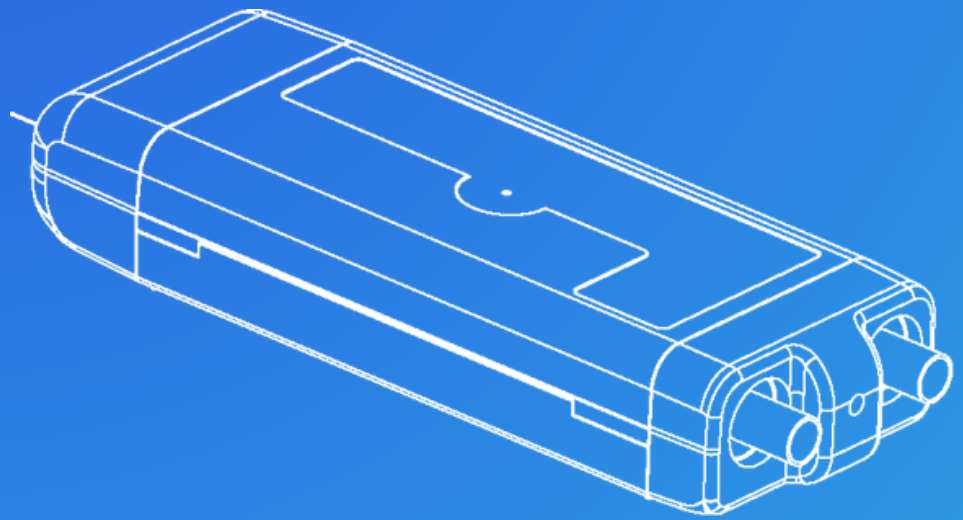

SAFE DEVICE USE

- Product not designed for domestic use. If used in a domestic setting, please read below and product manual carefully.
- Product produces safe levels of Ozone if used correctly, in line with manufacturers instructions. Use manufacturers room sizing guidance for correct product required.
- Only use in well ventilated rooms (at least 4 air changes an hour).
- Do not place face or mouth over outlet of product for sustained periods of time.
- If you suffer any of the following symptoms: Cough, Throat irritation, Pain, burning or discomfort in the chest when taking a deep breath, Chest tightness, wheezing, or shortness of breath turn off the device, move to fresh air and seek medical advice.
- This appliance may be used by children aged from 8 years and above and persons with reduced physical, sensory or mental capabilities or lack of experience and knowledge if they have been given supervision or instruction concerning use of the appliance in a safe way and understand the hazards involved. Children must not play with the appliance. Cleaning and user maintenance must not be carried out by children without supervision.
- Appliance is only to be used with the power supply unit provided with the appliance.
- Appliance not designed to be used at altitudes exceeding 2000m
- This appliance contains a UV-C emitter.
- Read the maintenance instructions before opening the appliance.
- If the appliance is used unintentionally or if the enclosure is damaged, hazardous UV-C radiation may be released. Even small doses of UV-C radiation can cause damage to eyes and skin.
- If the power adapter or supply cord is damaged, it must be replaced with new in order to avoid a hazard.

BIOZONE SCIENTIFIC
The Photoplasma™ Company

Sustainably Enhancing Indoor Environments

USER & INSTALLATION MANUAL

ICEZONE®

ENGLISH

Rev_B

ORIGINAL

BIOZONE SCIENTIFIC
The Photoplasma™ Company

Sustainably Enhancing Indoor Environments

Bulgarian (Български): Сканирайте QR кода за други езици
Croatian (Hrvatski): Skenirajte QR kod za druge jezike
Czech (Čeština): Naskenujte QR kód pro další jazyky
Danish (Dansk): Scan QR-koden for andre sprog
Dutch (Nederlands): Scan de QR-code voor andere talen
English: Scan QR code for other languages
Estonian (Eesti): Skannige QR-koodi teiste keelte jaoks
Finnish (Suomi): Skannaa QR-koodi muille kielille
French (Français): Scannez le code QR pour d'autres langues
German (Deutsch): QR-Code für andere Sprachen scannen
Greek (Ελληνικά): Σαρώστε τον κωδικό QR για άλλες γλώσσες
Hungarian (Magyar): Olvassa be a QR-kódot a többi nyelvért
Irish (Gaeilge): Scan an cód QR le haghaidh teangacha eile
Italian (Italiano): Scansiona il codice QR per altre lingue
Latvian (Latviešu): Skenējiet QR kodu citām valodām
Lithuanian (Lietuvių): Nuskaitykite QR kodą kitomis kalbomis
Maltese (Malti): Skennja l-kodiċi QR għal lingwi oħra
Polish (Polski): Zeskanuj kod QR, aby uzyskać inne języki
Portuguese (Português): Digitalize o código QR para outros idiomas
Romanian (Română): Scanați codul QR pentru alte limbi
Slovak (Slovenčina): Naskenujte QR kód pre ďalšie jazyky
Slovenian (Slovenščina): Skenirajte kodo QR za druge jezike
Spanish (Español): Escanee el código QR para otros idiomas
Swedish (Svenska): Skanna QR-koden för andra språk

https://biozonescientific.com/downloads/

TABLE OF CONTENTS

01. INTRODUCTION
02. INCLUDED PARTS LIST
03. DEVICE DESCRIPTION
04. BIOZONE SCIENTIFIC TECHNOLOGY
- What is Biozone Scientific Photoplasma™

05. INSTALLATION
- Recommended Tools
- Installation Location

06. BULB INDICATORS
- Ozone

07. LAMP CLEANING AND REPLACEMENT
08. TROUBLESHOOTING
09. WARRANTY AND CERTIFICATIONS
10. FAQs
11. SAFETY GUIDELINES
- Usage Safety
- Electrical Safety
- Safety in the Workplace
- Personal Safety
- Safe Device Use
- Use Guidelines

01. INTRODUCTION

This user manual is produced to facilitate the safe and trouble-free operation of the Biozone Scientific Icezone®. The product is designed and manufactured in strict adherence to technical standards, incorporating cutting-edge technologies and quality components. Moreover, it is produced in complete compliance with the most rigorous quality standards.

To enhance the product's lifespan and ensure a safe and effective operation, you must follow the instructions outlined in this user manual and perform regular maintenance tasks. The technical data and specifications provided in this user manual are current, but it's important to note that the manufacturer retains the right to implement any necessary changes.

CAUTION: DO NOT USE THE DEVICE UNLESS YOU HAVE THOROUGHLY READ AND UNDERSTOOD THIS USER MANUAL.

PLEASE NOTE: The drawings in this manual are for illustration purposes only and may not perfectly match the actual product. The original operation manual is in English, and other languages are translated versions from the English original.

02. INCLUDED PARTS LIST

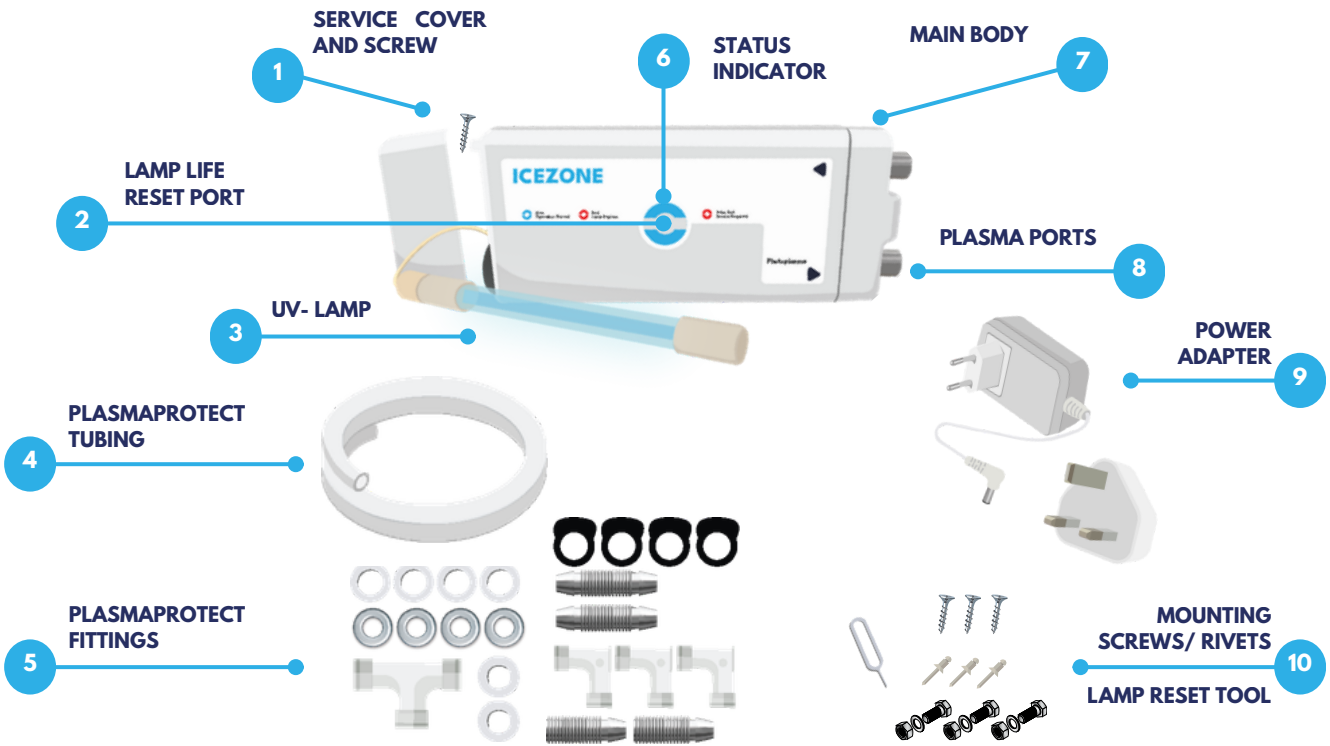

04. DEVICE DESCRIPTION

The Biozone Scientific Icezone® is a highly effective disinfection system for commercial Ice Machines, refrigerators, blast chillers and similar equipment. Icezone® inactivates microorganisms and breaks down organic residue, preventing mold growth and keeps these machines clean and operating smoothly.

Icezone® is the result of the extensive research and sustained product developments. Biozone Scientific has more than a decade of experience in designing and manufacturing its products.

Icezone® is highly effective and safe to use and fully complies with the criteria of the world's most respected certification bodies. Certificates issued to this effect are listed in section 09, Warranty and Certifications section of this manual.

Every Icezone® unit has undergone a strict quality control regime. However, if the unit malfunctions, follow the instructions in the troubleshooting section of this manual. If the problem persists, please contact your local distributor.

Biozone Scientific products are designed to be user-friendly with a high degree of functionality, ease of operation and simple installation. User feedback is important for the continuous development of our products.

We value your opinion and greatly appreciate your feedback, which you can send to: info@bsg-uv.com

For more information, visit our home page at: **www.biozonescientific.com** and discover:

- Biozone Scientific solutions for other applications such as garbage rooms, HVAC etc.
- Contact information for importers and distributors.

05. BIOZONE SCIENTIFIC TECHNOLOGY - PHOTOPLASMA™

Icezone® is an excellent tool designed for automated, chemical-free cleaning and disinfection of ice machines, refrigerators, blast chillers and similar equipment.

Icezone® harnesses our Photoplasma™ technology, which means it eliminates the need for harmful chemicals such as bleach and solvents. Icezone® also reduces machine cleaning time, and prevents the excessive wastage of water associated with manual cleaning. When you purchase Icezone®, you can be sure that you'll receive a return for the environment, as well as a return on investment.

Biozone Scientific's advanced Photoplasma™ technology is designed to sustainably enhance indoor environments. It goes beyond conventional cleaning methods by harnessing a combination of negative ions, hydroxyl radicals, singlet oxygen, ultraviolet light and ozone.

The elements of Photoplasma™ quickly and actively break down the structure of contaminants by a chain of reactions. Eventually the contaminants are decomposed and converted to harmless molecules such as carbon dioxide and water vapour.

In essence, Biozone Scientific's Photoplasma™ advanced technology brings the holistic benefits of the outdoors, where nature's cleansing mechanisms thrive, directly into our indoor spaces. It ensures a sustainably enhanced, healthier, and more refreshing living environment.

06. INSTALLATION

CLEAN AND SANITIZE ICE MACHINE PRIOR TO INSTALLATION

Before Installing Icezone®, clean the interior of the machine thoroughly according to the manufacturer's guidelines. **All surfaces should be free of slime and scale before starting the installation.**

RECOMMENDED TOOLS

The followlng tools and equipment should be used in order to efficiently and safely install the Icezone®.

- Hand Drill
- Phillips (+) Screw Driver
- 25mm (1 inch) Hole Saw
- 1/8 inch drill bit
- Hose Cutter or Utility Knife
- 1 ¼" Crescent Wrench
- Tape Measure
- Permanent Marker
- File, Knife, or Side cutters to de-burr holes
- Step Ladder
- Personal Protective Equipment (Gloves, Glasses, etc.)

CAUTION: Installation must be carried out by a qualified technician using appropriate safety equipment and procedures.

For model specific installation instructions, please visit www.biozonescientific.com or contact your Biozone Sales Representative

06. INSTALLATION

STEP 1: IDENTIFY INSTALLATION LOCATION

To determine the best location for your machine, start by looking for areas of mold growth and choose a position for Icezone® that will provide maximum treatment to that area.

It is recommended that the Icezone® be mounted on top of the machine. To avoid condensation, do not mount Icezone® with the supply and return ports pointing up.

FLAT MOUNT
Ports Horizontal

SIDE MOUNT
Ports Horizontal

SIDE MOUNT
Ports Down

SIDE MOUNT
Ports Up

STEP 2: DRILL SUPPLY & RETURN PORTS

Mark the location for the supply and return ports on the machine according to these steps:

- Supply and return fittings and tubing should be installed above the ice levels.
- Supply should be positioned to target areas that are vulnerable to slime buildup with Photoplasma™.
- Supply and distribution lines should be positioned as far apart as possible to maximize distribution of Photoplasma™.

Photoplasma™ is heavier than air, so install the supply line relatively high, and the return line relatively low.

Remove top panel or cover to be drilled. Drill the 25mm (1”) holes for the bulkhead fittings.
Clean the drilling debris from the holes in the machine. Install the fittings for the supply and return ports.

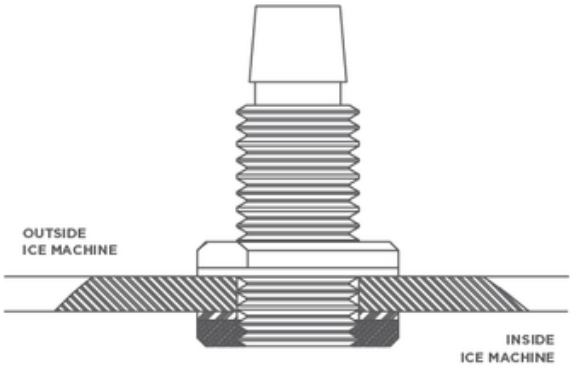

EXPANDED VIEW OF SUPPLY FITTING

06. INSTALLATION

STEP 3: MOUNT ICEZONE®

- Mark the location on the machine for the 4mm (5/32”) holes for the Icezone® plastic mounting rivets. These holes should be located above/near the mechanical area of the machine and not the ice making area or food zone.
- Drill the three (3) 4mm (5/32”) holes to mount the Icezone®.
- Attach Icezone® to the machine with mounting screws.

STEP 4: CONNECT FITTINGS & TUBING

- Arrange the tubing and fittings on the machine to connect to the IceZone® output and return ports.
- Attach the internal return tube and ensure it does not come in contact with any ice curtains through it’s range of motion.

Note: Hot water can be used to make the food-grade tubing more pliable to bend or receive fittings, as needed.

06. INSTALLATION

STEP 5: CONNECT POWER & PLUG IN ICEZONE®

- Insert the power-supply cord through the service cover slot and into the DC power socket.
- Place the service cover over the end of the Icezone® and install the cover screw.
- Plug the Icezone® power adapter in to the wall and observe that status light on top of the Icezone®.
- The status light should show a blue circle indicating normal operation.

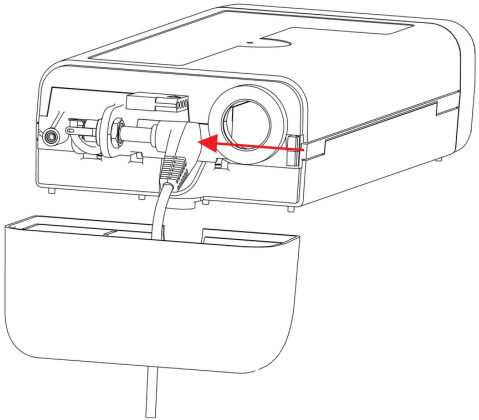

ICEZONE® IS NOW OPERATING AND KEEPING YOUR MACHINE CLEAN!

06. BULB INDICATORS

Steady blue:
Operation normal

Steady red:
Replace lamp

Flashing red:
Service required

If a new lamp is required, please contact your local supplier.

OZONE HAZARD

Icezone® generates ozone as one of the components of Photoplasma™ from oxygen found in the ambient air. Occupational Safety and Health Administration (OSHA) limits for ozone are as follows:

- **Long term exposure limit: 0.10 ppm for 8 hours**
- **Mid term exposure limit: 0.20 ppm for 2 hours**
- **Short term exposure limit: 0.30 ppm for 15 minutes**

Icezone® is designed to produce ozone below the above listed limits when installed, used and maintained as instructed. Ozone is approved by the US FDA for food service use and is categorized as "generally regarded as safe" (GRAS).

07. LAMP CLEANING AND REPLACEMENT

The Biozone Scientific Photoplasma™ lamp in Icezone® needs to be replaced every 9,000 hours, roughly once a year. Photoplasma™ lamps continue to emit visible light but lose effectiveness over time.

ATTENTION: Avoid touching the glass portion of the lamps with bare fingers. Use gloves or a cloth to handle the lamps. If the glass is touched, use isopropyl alcohol to wipe the glass surface clean.

ATTENTION: When replacing the lamp, allow sufficient time for it to cool before handling. Surfaces may remain hot and pose a risk of burns.

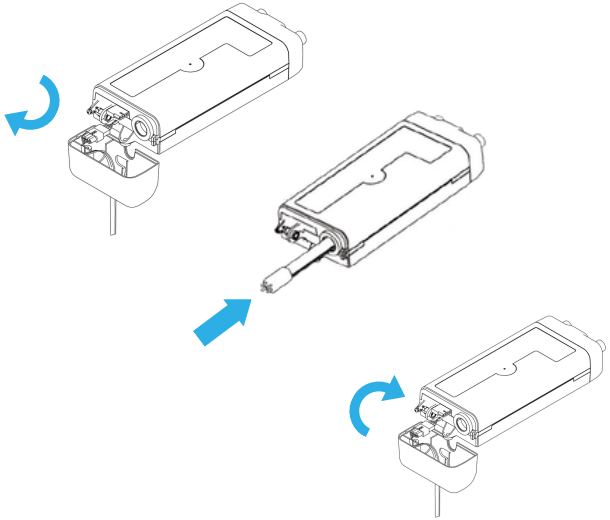

1. **Disconnect the power supply.**
2. **Allow 10 minutes for the lamps to cool.**
3. **Remove service cover.**
4. **Unplug the lamp connector from the lamp.**
5. **Remove the lamps from the lamp clips.**
6. **Wipe the lamps with alcohol to clean the glass surface.**
7. **Place the cleaned lamp or new lamp into the lamp clips.**
8. **Connect the lamp connector observing the correct orientation of the pins.**
9. **Replace service cover.**
10. **Reconnect the power supply.**

IMPORTANT!
Use only authentic Biozone Scientific replacement lamps.
Use of replacement lamps from other manufacturers will immediately void the system warranty and affect performance of the system.

07. LAMP CLEANING AND REPLACEMENT

IMPORTANT!

Reset the lamp life counter by holding down the reset tool in the reset hole at the center of the LED Indicator Status ring. If the reset tool is not available, a paperclip can be substituted.

LAMP RESET TOOL

UNIT	REPLACEMENT LAMP PART NUMBER
Icezone X05	10-08010
Icezone X10	10-08025
Icezone X20	10-08050
Icezone X30	10-08100

Disposing of the lamps according to local hazardous waste disposal laws. The lamps are disposed of at the same facilities as household fluorescent bulbs or compact fluorescent lamp bulbs. The lamps contain mercury.

09. TROUBLESHOOTING

ATTENTION: Servicing Icezone requires a qualified maintenance professional. Disconnect power before cleaning or servicing the Icezone.

ISSUE	CHECK
Flashing Red Light (Fan works)	• Open the Icezone service cover and check that the lamp connectors are properly installed. • Replace lamp.
Steady Red Light (Fan works)	• Lamp time expired. Replace lamp to maintain effective ice machine cleaning. Reset lamp timer after installing new lamp.
No Light (Fan does not work)	• Make sure (1) power supply is plugged in, (2) power outlet is working properly, and (3) power cord is undamaged.
Weak airflow	• Clean lamp. Check for blocked hose or fittings.

11. WARRANTY AND CERTIFICATIONS

WARRANTY

Biozone Scientific provides a standard 1-year warranty on its products. Warranty coverage starts from the date of purchase.

WARRANTY CONDITIONS

- The appliance is guaranteed against defects in material and workmanship under normal use and appropriate voltage for one year from the purchase date.
- Warranty does not apply to any appliance that has been tampered with, altered, subjected to misuse, abnormal voltage input, power interruption, electric shock, negligence, accident, force majeure, or if the serial number has been altered, effaced, or removed.
- Failures due to improper or unreasonable usage, maintenance, accident, improper packing, unauthorised tampering, alteration, or modification will not be covered under warranty as determined by Biozone Scientific.
- Any unsanctioned repairs of the interior or exterior finish of the casing, control plate, knobs, accessories, or consumable parts will void warranty.
- Replacement lamps are excluded from warranty coverage; Biozone Scientific lamps are covered by a 1-year prorated warranty.
- Any repairs or replacements of defective parts by Biozone Scientific will be covered under warranty.
- Transportation or shipping costs to or from the repair facilities are not covered under warranty.
- Warranty is valid only when using Biozone Scientific replacement lamps and parts.
- Biozone Scientific engineers will determine whether the product will be repaired or replaced at their sole discretion.

11. WARRANTY AND CERTIFICATIONS

WARRANTY

Please note that this warranty supersedes any other written warranty, whether expressed or implied, written or oral, including a warranty of merchantability or fitness for a particular purpose. The manufacturer's maximum liability shall not exceed the actual purchase price paid for the product. Additionally, the warranty will be considered void if the label bearing the serial number has been removed or defaced.

WARRANTY RETURN PROCESS

1. Contact your supplier for specific return instructions and to receive your RMA (Return to Manufacturer Authorisation) number. Any return not labelled with an RMA number will be systematically refused.
2. Pack the product in its original box and in the same manner you received it or as similar as possible. Label the outside of the box with your RMA number.
3. Return the product with proof of purchase. Any return not including a proof a purchase will be systematically refused.
4. Label and ship the unit, freight prepaid to the address provided with your RMA number.

CERTIFICATIONS AND MARKINGS

12. FAQs

Q1. HOW CAN I DETERMINE IF THE ICEZONE UNIT IS FUNCTIONING PROPERLY?

A1: You can verify the correct operation of the unit by checking for the presence of a blue light during its operation. Additionally, if the mold is completely removed inside your ice machine, it indicates that the unit is working as intended. If the blue light is visible but there is no significant reduction in mold, please contact your supplier for assistance.

Q2. WHAT SCIENTIFIC EVIDENCE BACKS THE EFFECTIVENESS OF BIOZONE SCIENTIFIC PRODUCTS?

A2: Biozone Scientific products are supported by extensive research validating the efficacy of ultraviolet light, ozone, active oxygen atoms, hydroxyl radicals, negative ions, and plasmas in air and surface purification and sanitization. Furthermore, Biozone Scientific has conducted independent testing in certified laboratories to reinforce the effectiveness of its units.

Q3. IS ICEZONE NSF COMPLIANT WHEN INSTALLED ON AN ICE MACHINE?

A3: Absolutely. Icezone is fully compliant with National Sanitation Foundation (NSF) standards and is certified for retrofit installation on the majority of ice machines. The NSF compliance of your ice machine is maintained when you integrate the Icezone ice machine sanitizer.

Q4. HOW CAN ICEZONE CONTRIBUTE TO COST SAVINGS?

A4: Icezone is designed to significantly reduce your expenses in various ways. It minimizes the frequency of required ice machine cleanings, thereby cutting down on associated costs. Additionally, it mitigates downtime expenses, decreases maintenance and repair costs caused by the accumulation of biofilm on working parts, by doing so, Icezone helps lower labor costs.

13. SAFETY GUIDELINES

CONDITIONS OF USE

USAGE SAFETY

CAUTION: Carefully read all safety warnings and instructions. Failing to adhere to these warnings and instructions may result in severe injury or, in extreme cases, even death.
In the following safety warnings and instructions, the terms "device" or "product" refer to the Icezone.

ELECTRICAL SAFETY

- Ensure the plug fits the socket. Using original plugs with matching sockets reduces the risk of electric shock.
- Water ingress drastically increases the risk of device damage and electric shock. Install product away from areas prone to excessive moisture.
- Do not touch the device with wet or damp hands.
- Use the cable solely for its intended purpose. Never use it to transport the device or to forcibly extract the plug from a socket. Ensure the cable remains clear of heat sources, oil, sharp objects, or moving components.
- Compromised or tangled cables heighten the potential for electric shock.
- Do not operate the device if the power adapter exhibits damage or displays signs of wear. If the power adapter or supply cord is damaged, it must be replaced with new in order to avoid a hazard
- To prevent the risk of electric shock, avoid submerging the power supply, cable, or the device itself in water or any other liquids. Likewise, do not use the device on wet surfaces.

SAFETY IN THE WORKPLACE

- Ensure that your workspace is clean and well-lit. A cluttered or poorly lit workspace can increase the risk of accidents. Exercise foresight, pay attention to ongoing activities, and apply good sense and sound Judgment when operating the device.
- If you come across any damage or irregular operation, promptly turn off the device and report the issue to a supervisor without delay.
- If there are any uncertainties regarding the correct operation of the device, contact the manufacturer's support service for guidance.
- In the event of a fire, use a powder or carbon dioxide (CO_2) fire extinguisher designed for use on live electrical devices to extinguish it.
- Please retain this manuals QR code, as found on the box, for future reference. If you transfer the device to a third party, ensure the QR code is passed on along with it.

13. SAFETY GUIDELINES

SAFETY IN THE WORKPLACE CONTINUED

- Keep the device out of reach of children and animals.
- Do not directly inhale air from outlet of product.
- Refrain from leaving the door open on the ice machine.

PERSONAL SAFETY

- Do not operate the device when tired, unwell, or under the influence of alcohol, narcotics, or medications that could significantly impair your ability to use the device safely.
- This appliance may be used by children aged from 8 years and above and persons with reduced physical, sensory or mental capabilities or lack of experience and knowledge if they have been given supervision or instruction concerning use of the appliance in a safe way and understand the hazards involved. Children must not play with the appliance. Cleaning and user maintenance must not be carried out by children without supervision.
- Only physically fit individuals, who have received appropriate training, are familiar with this manual, should handle the device.
- While working with the device remain vigilant, always follow instructions provided. Lapses in concentration during device operation can result in injury.
- To prevent accidental activation of the device, ensure that the switch is set to the OFF position before connecting it to a power source.
- Always unplug the Icezone device before beginning an ice machine cleaning, sanitizing, or descaling cycle. Plug in the Icezone device when the cycle is complete.
- If overly strong odor of ozone is detected, disconnect device from power, and verify proper operation of ventilation system. If there is proper ventilation, or if problem persists, please contact your local supplier.

USE GUIDELINES

- The device is designed to prevent growth of mold and microorganisms. The user is liable for any damage resulting from unintended use of the device.

SAFE DEVICE USE

- Ensure the plug is disconnected from the socket before making any adjustments, replacing consumables, or setting the device aside. These precautions minimize the risk of unintentionally activating the device.
- When not in use, store the device in a secure location, away from children and individuals who are unfamiliar with the device and have not read the user manual. Inexperienced users can pose a safety risk when handling the device.
- Maintain the device in good condition. Before each use, inspect it for any general damage, with particular attention to cracked parts or elements, as well as any other issues that might affect safe operation. If damage is detected, send the device for repair before using it.
- Keep the device out of reach of children.
- Device repairs or maintenance should only be carried out by qualified individuals using original spare parts to ensure safe usage.
- To preserve the device's operational integrity, avoid removing factory-fitted guards and refrain from loosening any screws.
- When transporting and handling the device from the warehouse or storage to the destination of use, adhere to the occupational health and safety guidelines applicable in the country where the device will be used.

SAFE DEVICE USE CONTINUED

- Do not use the device if it malfunctions.
- Avoid obstructing the air intake and outlet.
- If any room within which the product is installed has a suspected residual Photoplasma™ level higher than normal level, leave the room and wait 20 minutes allowing the room to ventilate.
- It is prohibited to modify the device's structure to alter its parameters or construction.
- Keep the device away from sources of fire and heat.
- Do not overload the device.
- Avoid covering the ventilation openings.
- Individuals with impaired sense of smell should refrain from using the device.
- Under no circumstances should you directly inhale Photoplasma™ emitted from the device's outlet holes. Inhaling high concentrations of Photoplasma™ over a short period or low concentrations of Photoplasma™ over an extended duration may pose serious health risks or even be life-threatening.
- Do not use the equipment for therapeutic purposes.
- Do not look at Photoplasma™ lamps when lit ; UV light may damage eyes.
- If respiratory, eye, nose and throat irritation, shortness of breath, chest pain or coughing is experienced, seek fresh air immediately. Seek medical attention if necessary. Disconnect power from device and please contact your doctor.

ATTENTION! Despite the safe design of the device and its protective features, and despite the use of additional elements protecting the operator, there is still a minor risk of accident or injury when using the device. Stay alert when using the device.

NOTES

ICEZONE

Document: 501-OpManual- Icezone Manual
Revision: Issue 2- Rev B
Date: 17/03/2026